NORLYS

TRELLEBORG

TRELLEBORG

Designed for modern urban spaces where durability, efficiency, and timeless design matter most.

TRELLEBORG

With its minimalist geometry and clean architectural lines, Trelleborg blends seamlessly into contemporary residential and commercial developments. The robust construction ensures long-term reliability, while advanced LED technology delivers efficient, uniform lighting with reduced operating costs.

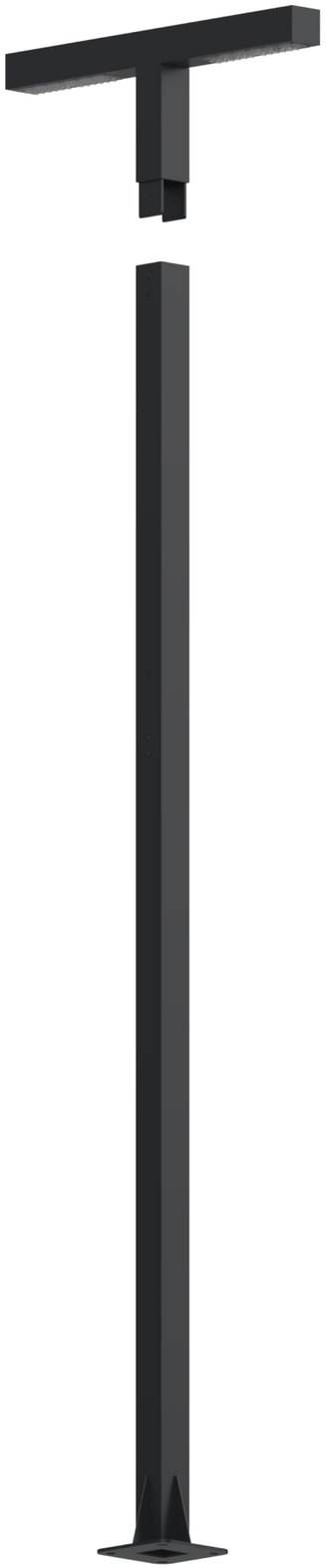

2649ZX0009

144ZX0010

lub

7662ZX0009

7672ZX0009

TRELLEBORG

CE | 220-240V | IP65 | IK10 | LED | DALI2

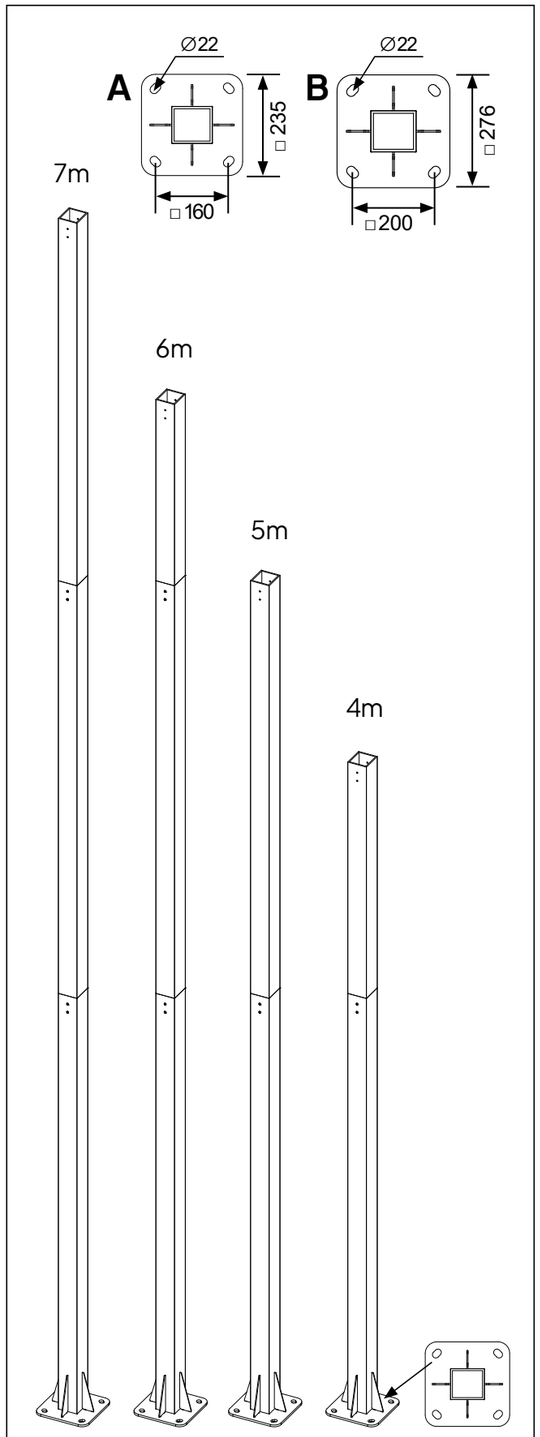

7m	6m	5m	4m	
2653	2652	2651	2650	A
2658	2657	2656	2655	B

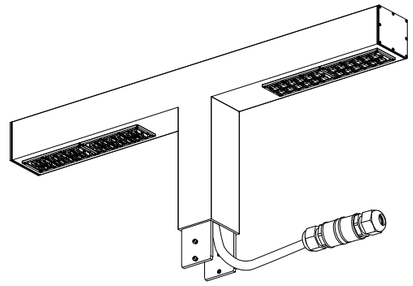

4 LED

2600
2601
2602
2603
2604
2605

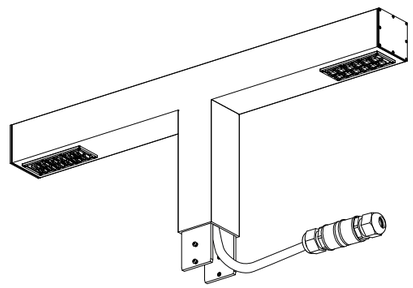

2 LED

2612
2613
2614
2615
2616
2617

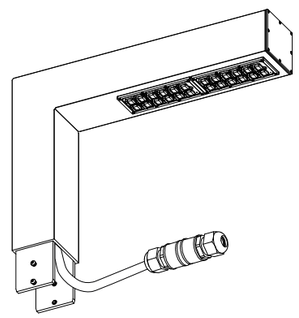

2 LED

2606
2607
2608
2609
2610
2611

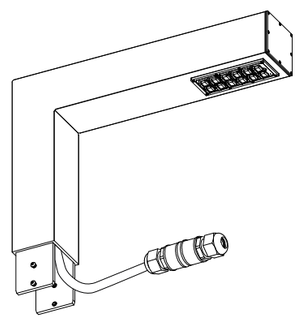

1 LED

2618
2619
2620
2621
2622
2623

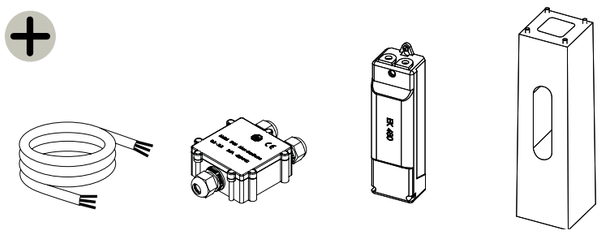

2649ZX0009 | 144ZX0010 | 7662ZX0009 | 7672ZX0009

NORLYS

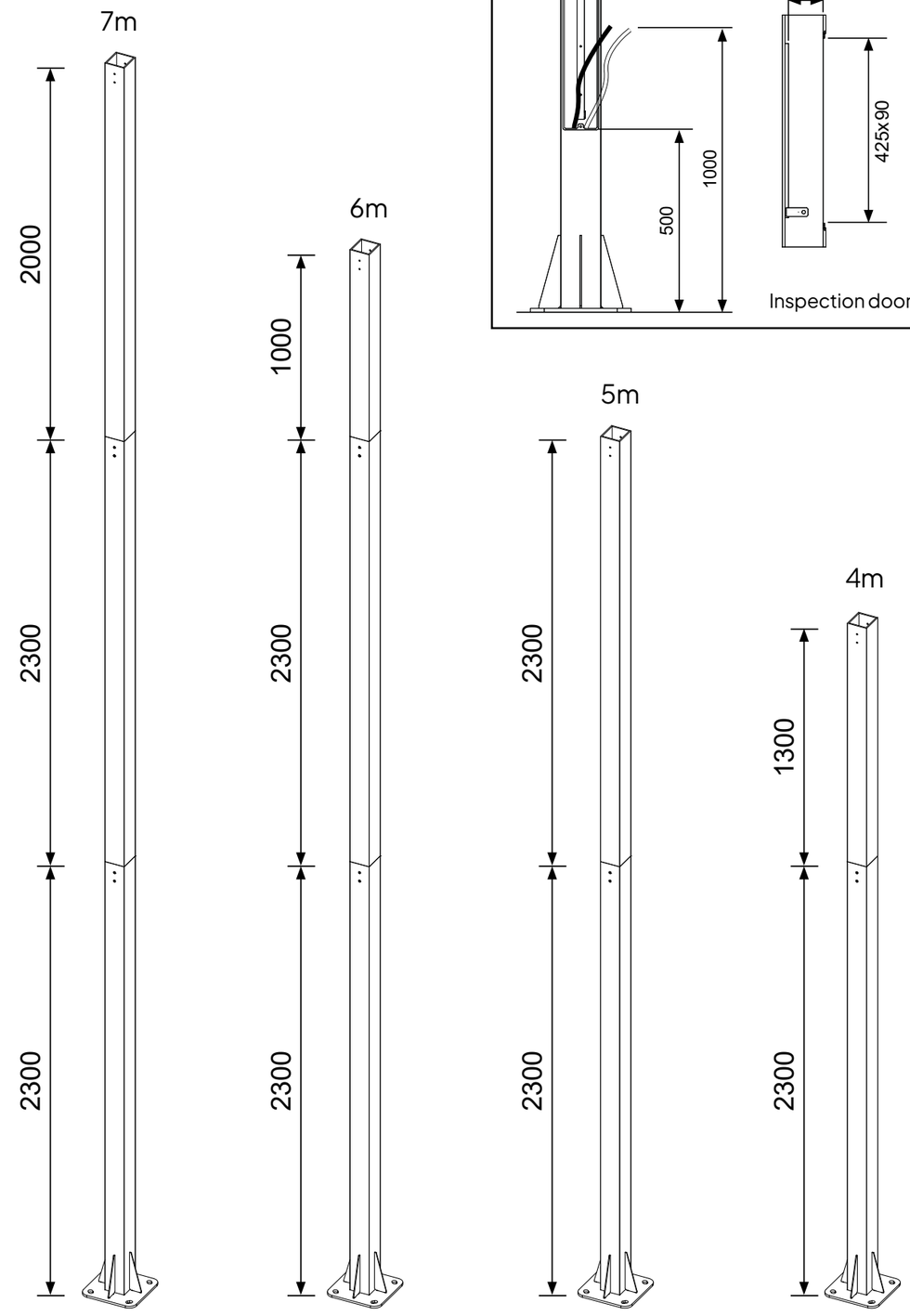

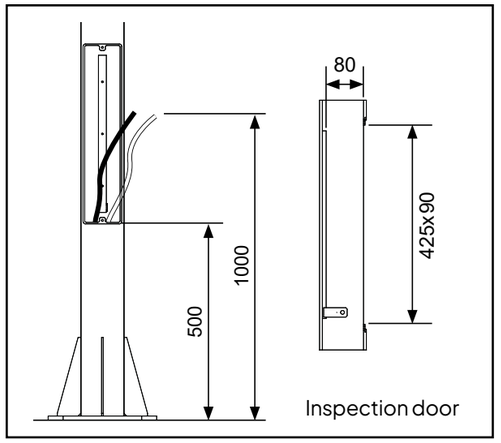

21

4 LED

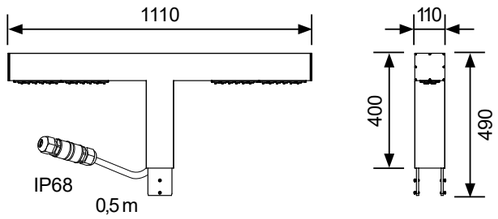

Index	Colour	LED colour	Lens	Control	Power	Light beam
2600	BL / GR / AL	2700	VSM	DALI	80W	11289 LM
2601	BL / GR / AL	3000	VSM	DALI	80W	11225 LM
2602	BL / GR / AL	4000	VSM	DALI	80W	12119 LM
2603	BL / GR / AL	2700	SCL	DALI	80W	11132 LM
2604	BL / GR / AL	3000	SCL	DALI	80W	11276 LM
2605	BL / GR / AL	4000	SCL	DALI	80W	12215 LM

BL | Black **GR** | Graphite **AL** | Aluminium

SCL — SCL lens (IESNA type II/III)

Type II/III (long) lighting beam, allowing for a large distance between posts. Ideal for pavements and roads in residential areas.

VSM — VSM lens (IESNA type V)

Type V provides circular distribution. Thanks to its uniform distribution at all side angles, it is ideal for general lighting – it is the perfect choice for lighting car parks or crossroads.

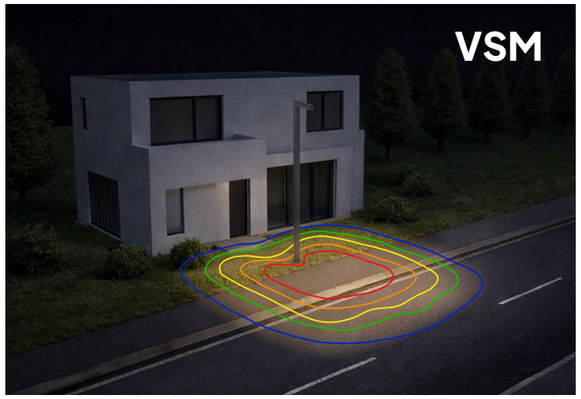

2 LED

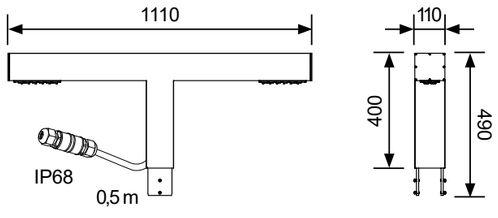

Index	Colour	LED colour	Lens	Control	Power	Light beam
2612	BL / GR / AL	2700	VSM	DALI	40W	5837 LM
2613	BL / GR / AL	3000	VSM	DALI	40W	5931 LM
2614	BL / GR / AL	4000	VSM	DALI	40W	6119 LM
2615	BL / GR / AL	2700	SCL	DALI	40W	5613 LM
2616	BL / GR / AL	3000	SCL	DALI	40W	5601 LM
2617	BL / GR / AL	4000	SCL	DALI	40W	6115 LM

BL | Black **GR** | Graphite **AL** | Aluminium

SCL — SCL lens (IESNA type II/III)

Type II/III (long) lighting beam, allowing for a large distance between posts. Ideal for pavements and roads in residential areas.

VSM — VSM lens (IESNA type V)

Type V provides circular distribution. Thanks to its uniform distribution at all side angles, it is ideal for general lighting – it is the perfect choice for lighting car parks or crossroads.

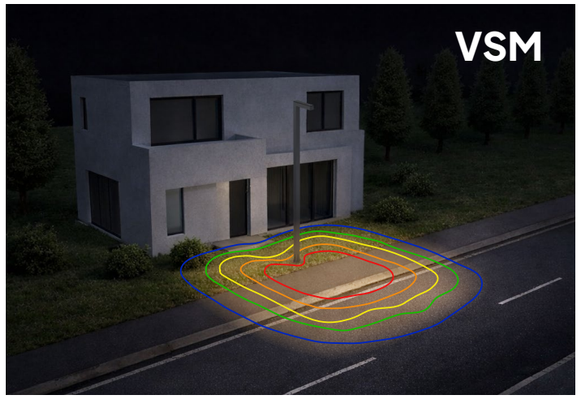

2 LED

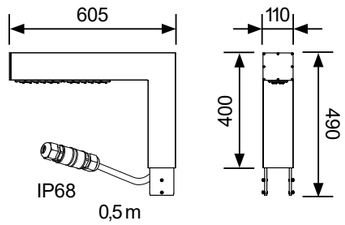

Index	Colour	LED colour	Lens	Control	Power	Light beam
2606	BL / GR / AL	2700	VSM	DALI	40W	5590 LM
2607	BL / GR / AL	3000	VSM	DALI	40W	5538 LM
2608	BL / GR / AL	4000	VSM	DALI	40W	5984 LM
2609	BL / GR / AL	2700	SCL	DALI	40W	5541 LM
2610	BL / GR / AL	3000	SCL	DALI	40W	5537 LM
2611	BL / GR / AL	4000	SCL	DALI	40W	6018 LM

BL | Black **GR** | Graphite **AL** | Aluminium

SCL — SCL lens (IESNA type II/III)

Type II/III (long) lighting beam, allowing for a large distance between posts. Ideal for pavements and roads in residential areas.

VSM — VSM lens (IESNA type V)

Type V provides circular distribution. Thanks to its uniform distribution at all side angles, it is ideal for general lighting – it is the perfect choice for lighting car parks or crossroads.

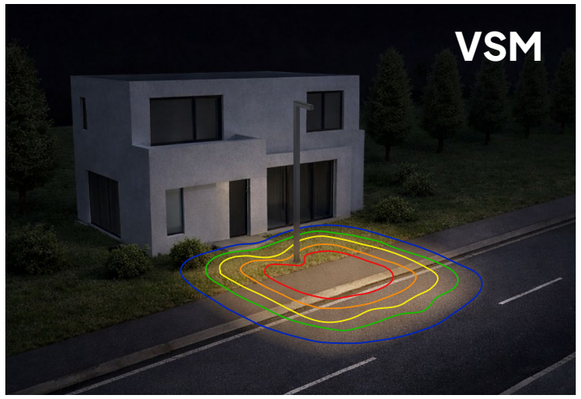

1 LED

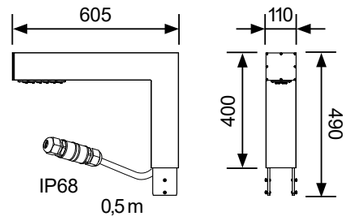

Index	Colour	LED colour	Lens	Control	Power	Light beam
2618	BL / GR / AL	2700	VSM	DALI	19,5W	2864 LM
2619	BL / GR / AL	3000	VSM	DALI	19,5W	2817 LM
2620	BL / GR / AL	4000	VSM	DALI	19,5W	3067 LM
2621	BL / GR / AL	2700	SCL	DALI	19,5W	2801 LM
2622	BL / GR / AL	3000	SCL	DALI	19,5W	2783 LM
2623	BL / GR / AL	4000	SCL	DALI	19,5W	3030 LM

BL | Black **GR** | Graphite **AL** | Aluminium

SCL — SCL lens (IESNA type II/III)

Type II/III (long) lighting beam, allowing for a large distance between posts. Ideal for pavements and roads in residential areas.

VSM — VSM lens (IESNA type V)

Type V provides circular distribution. Thanks to its uniform distribution at all side angles, it is ideal for general lighting – it is the perfect choice for lighting car parks or crossroads.

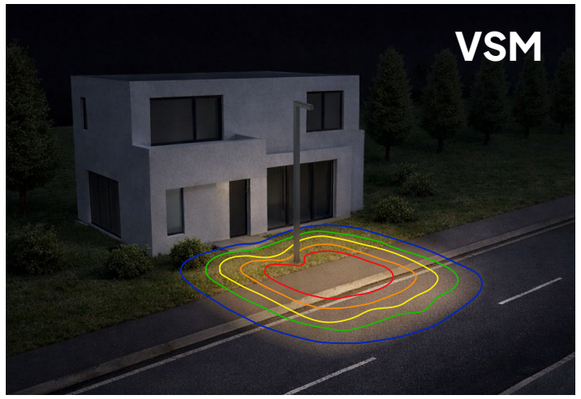

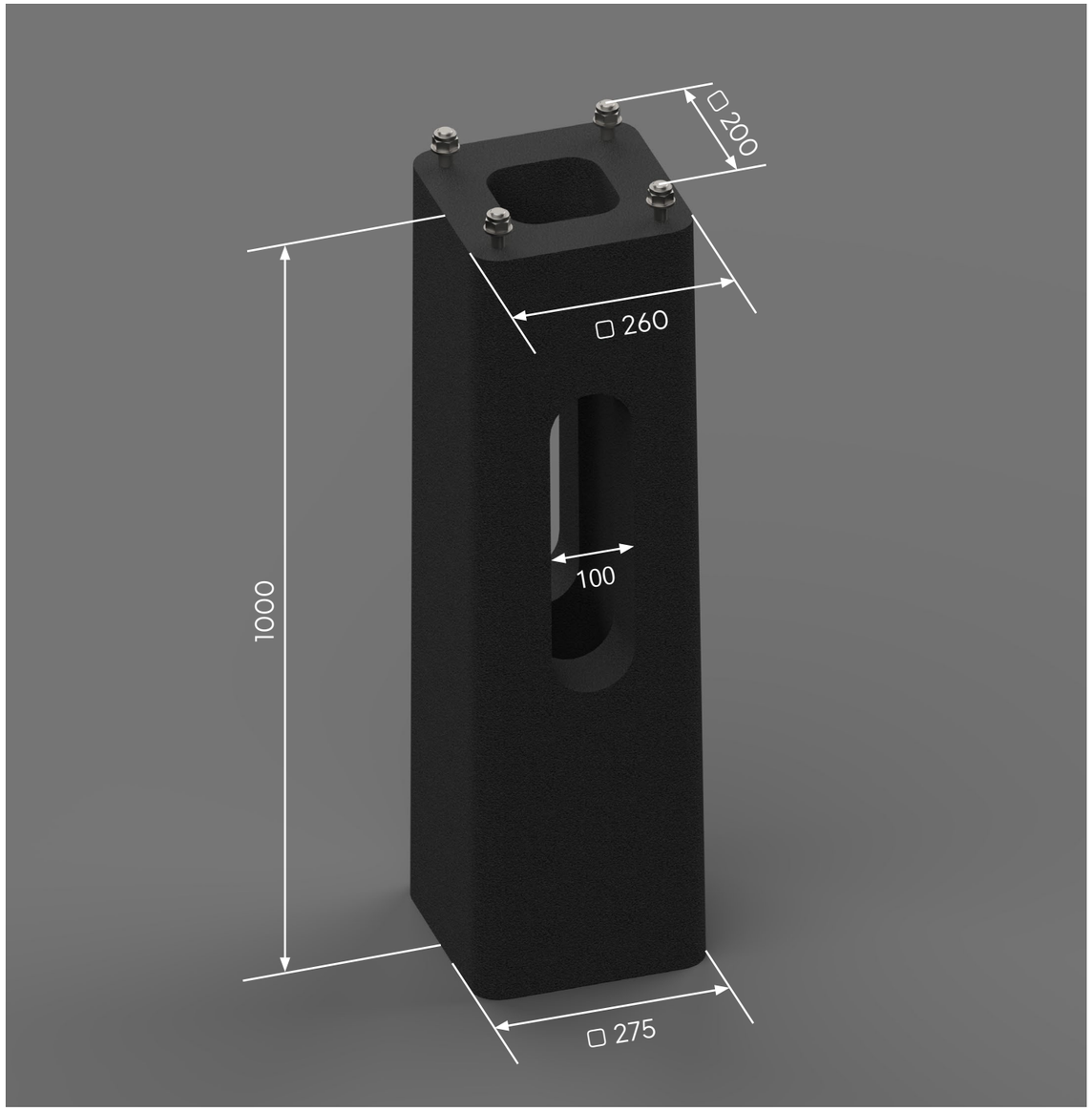

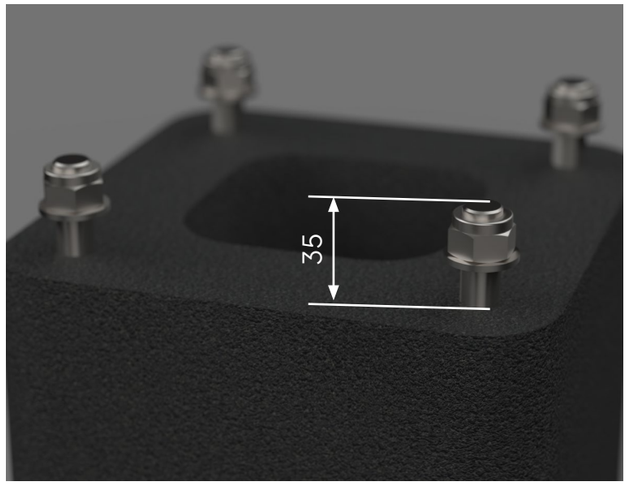

CONCRETE FOUNDATION 7672ZX0009

Type of accesory

Type of accessory	Accessories - concrete foundation
Characteristics of the accessory	Type B-51 concrete foundation for embedding in the ground. Used for poles up to a maximum height of 7 meters depending on thenorms and building regulations applicable in the given region.

General information

Materials	Galvanized steel, concrete
Mounting method	Installation should be carried out according to the attached instructions. The article is intended for the installation of posts with a bolt spacing of 200×200 and an M18 thread. Height of bolts above concrete level h=35 mm. Equipment: - galvanized flat washer x4 pieces - galvanized spring washer x4 pieces - galvanized M18 nut x4 pieces - plastic cap x4 pieces The foundation is protected with an asphalt emulsion. NOTE: The choice of the type and dimensions of the foundation is always dependent on the site conditions, and the responsibility for their proper selection, in accordance with the Building Law, rests with the designer.
Accessory weight net	125 kg
Accessory dimensions [cm]	275 cm x 275 cm x 1000 cm

Declared performance characteristics

Essential characteristics of a construction product	Declared performance characteristics	Harmonised technical specification
Construction details: Geometric data Technical documentation	H=1000mm, A=260mm 2B/F/STY/2016	EN 14991:2007
Compressive strength of concrete	**≥37 N/mm²**	
Reinforcing steel: Yield strength Tensile strength	**Re = 500 N/mm²** **Rm = 550 N/mm²**	
Durability	Concrete exposure classes: **XC4, XF3, XD2, XA1**	

Power supplies

4699200106	Power supply Philips Xi FP 40W
4699200202	Power supply Philips Xi FP 22W

LED modules

4699100404	LED 2x6 2700K
4699100402	LED 2x6 3000K
4699100403	LED 2x6 4000K

Lenses

4699940500	SOCZEWKA LEDIL CS17082_STRADA-IP-2X6-VSM-PC
4699900003	SOCZEWKA LEDIL CS17261_STRADA-IP-2X6-SCL-PC

SERVICE KITS

Type **T**

Index	Power supply		LED module		Lens	
2600	**2 x 40W**	4699200106	**4 x 2,7K**	4699100404	**4 x VSM**	4699940500
2601	**2 x 40W**	4699200106	**4 x 3 K**	4699100402	**4 x VSM**	4699940500
2602	**2 x 40W**	4699200106	**4 x 4 K**	4699100403	**4 x VSM**	4699940500
2603	**2 x 40W**	4699200106	**4 x 2,7K**	4699100404	**4 x SCL**	4699900003
2604	**2 x 40W**	4699200106	**4 x 3 K**	4699100402	**4 x SCL**	4699900003
2605	**2 x 40W**	4699200106	**4 x 4 K**	4699100403	**4 x SCL**	4699900003
2612	**2 x 22W**	4699200202	**2 x 2,7K**	4699100404	**2 x VSM**	4699940500
2613	**2 x 22W**	4699200202	**2 x 3 K**	4699100402	**2 x VSM**	4699940500
2614	**2 x 22W**	4699200202	**2 x 4 K**	4699100403	**2 x VSM**	4699940500
2615	**2 x 22W**	4699200202	**2 x 2,7K**	4699100404	**2 x SCL**	4699900003
2616	**2 x 22W**	4699200202	**2 x 3 K**	4699100402	**2 x SCL**	4699900003
2617	**2 x 22W**	4699200202	**2 x 4 K**	4699100403	**2 x SCL**	4699900003

Type **L**

Index	Power supply		LED module		Lens	
2606	**1 x 40W**	4699200106	**2 x 2,7K**	4699100404	**2 x VSM**	4699940500
2607	**1 x 40W**	4699200106	**2 x 3 K**	4699100402	**2 x VSM**	4699940500
2608	**1 x 40W**	4699200106	**2 x 4 K**	4699100403	**2 x VSM**	4699940500
2609	**1 x 40W**	4699200106	**2 x 2,7K**	4699100404	**2 x SCL**	4699900003
2610	**1 x 40W**	4699200106	**2 x 3 K**	4699100402	**2 x SCL**	4699900003
2611	**1 x 40W**	4699200106	**2 x 4 K**	4699100403	**2 x SCL**	4699900003
2618	**1 x 22W**	4699200202	**1 x 2,7K**	4699100404	**1 x VSM**	4699940500
2619	**1 x 22W**	4699200202	**1 x 3 K**	4699100402	**1 x VSM**	4699940500
2620	**1 x 22W**	4699200202	**1 x 4 K**	4699100403	**1 x VSM**	4699940500
2621	**1 x 22W**	4699200202	**1 x 2,7K**	4699100404	**1 x SCL**	4699900003
2622	**1 x 22W**	4699200202	**1 x 3 K**	4699100402	**1 x SCL**	4699900003
2623	**1 x 22W**	4699200202	**1 x 4 K**	4699100403	**1 x SCL**	4699900003

NORLYS

www.norlys.com